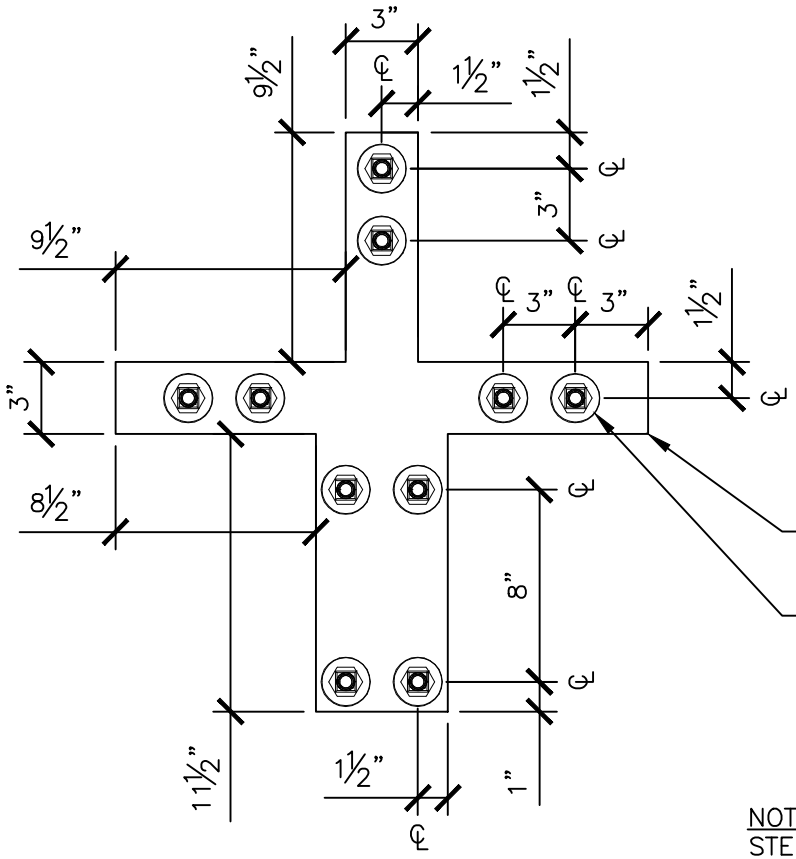

NOTE: EACH KIOSK REQUIRES A TOTAL OF 4 STEEL SIDE PLATES TO BE INSTALLED ON BOTH SIDES OF POST/BEAM CONNECTIONS.

City of Bellevue

TITLE:

COAL CREEK NATURAL AREA - SIGN - 1 OR 2 SIDED KIOSK - POST/BEAM/PLATE CONNECTION

DRAWING #:	PK-CC-05E
SCALE:	N.T.S.
REVISION DATE:	12-2018
DEPARTMENT:	PARKS