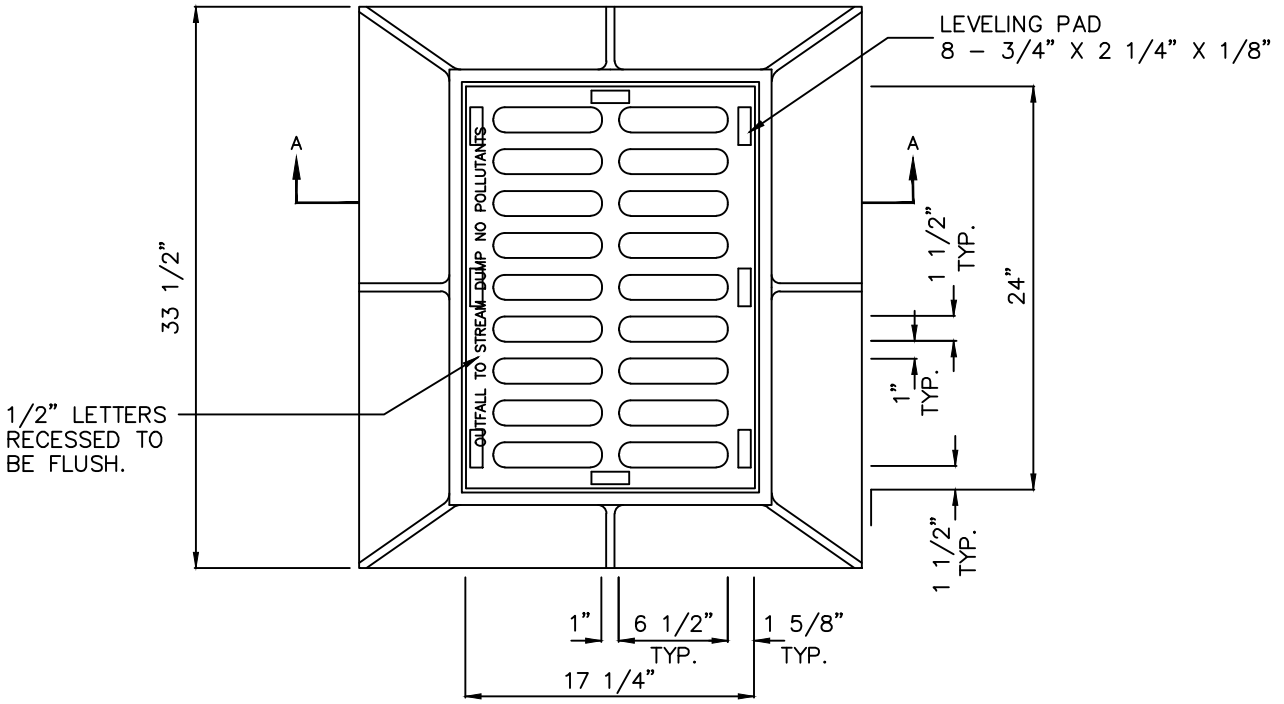

PLAN

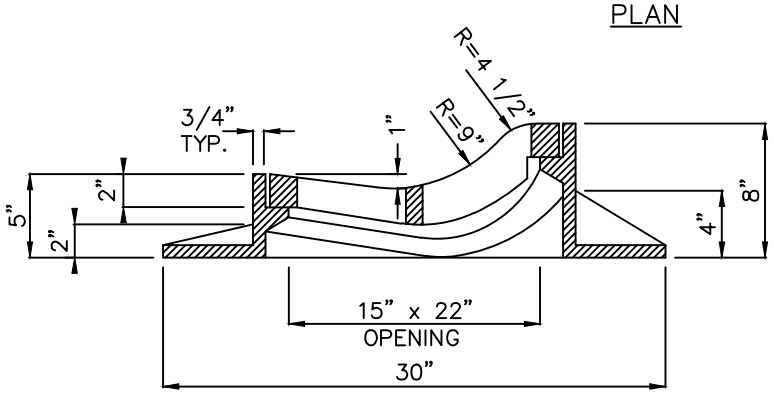

SECTION A–A

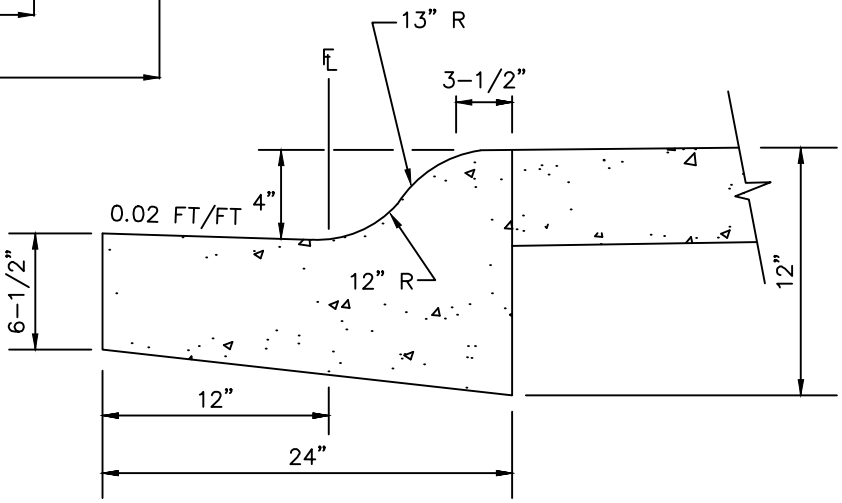

ROLLED CURB

NOTES:

1. FRAME MATERIAL IS CAST IRON ASTM A48 CLASS 30.

City of Bellevue

STORM AND SURFACE WATER UTILITY

TITLE

FRAME & GRATE FOR EXISTING ROLLED CURB

JANUARY 2022

NO SCALE

NO. D–12